SHARP®

SERVICE MANUAL

SE0028LW92E00
Issued: 22nd Jan. 2004

AK-45 CHASSIS

PAL B/G, I / SECAM L/L', B/G, D/K SYSTEM COLOUR TELEVISION

MODEL 28LW-92E ES

In the interests of user safety (required by safety regulations in some countries) the set should be restored to its original condition and only parts identical to those specified should be used.

In order to service the model 28LW-92E , refer to the AK-45 Chassis Service Manual (SE00AK45CHA00).

CONTENTS

ELECTRICAL SPECIFICATIONS 3
IMPORTANT SERVICING NOTES 4
CONTROLS & TERMINALS 5
PRINTED WIRING BOARD LAYOUT 7
PARTS LISTING 8
HOW TO UPDATE THE TECHNICAL INFORMATION 11

SHARP CORPORATION

This document has been published to be used for after sales service only.

SERVICE MANUAL UPDATE LOG SHEET

Technical Report No. Technical Bulletin No.	Cause / Solution	Part No.	Page No.	Application Data /Serial No.

Use this page to keep any special servicing information as Technical Report (Bulletin), Technical Information, etc.
If only part number changes are required, just change part number directly the part number in the Parts Listing Section.
If you need more information, please refer to the Technical Report (Bulletin).

ELECTRICAL SPECIFICATIONS

•Power Input ..... 220V-240 Volts AC 50 Hz

•Power Consumption
Normal Operation (Method IEC60107) ..... 80 W
Stand-by Operation ..... < 4 W

•Audio Power Output Rating (MPO) / Impedance
Internal Left Speaker ..... 10 W, 8 Ω
Internal Right Speaker ..... 10 W, 8 Ω

•Speakers
2 ways speaker elliptic (2 pcs) ..... 42 x 180 mm
Tweeter (2 pcs) 27mm

•Convergence (Maximum Misconvergence)

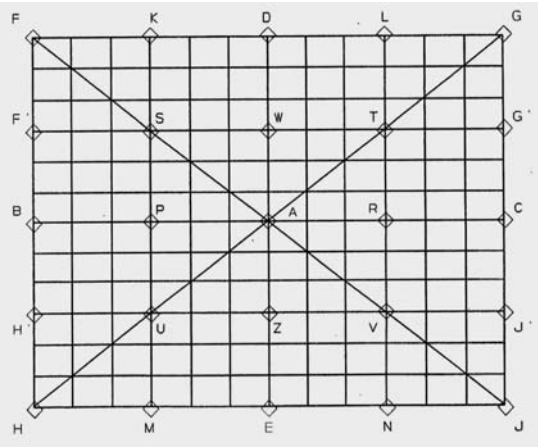

AREA	mm
A	0.4
BC	1.2
DE	0.8
FGHJ	1.6
KLMN	1.4
F'G'H'J'	1.4
STUV	1.2

•Picture Intermediate frequency
L' 33.9MHz
L, B/G, D/K,I 38.9MHz

•Sound Carrier Trap
L' 40.4MHz
L, D/K 32.4MHz
B/G 33.4MHz
I 32.9MHz

•Adjacent Sound Carrier Trap
L' 32.4MHz
L, D/K, B/G 40.4MHz
I 40.9MHz

•Adjacent Picture Carrier Trap
L' 41.9MHz
L, D/K, I 30.9MHz
B/G 31.9MHz

•Aerial Input Impedance
VHF/UHF ..... 75 ohm Unbalanced

•Tuning Ranges ..... 45.75MHz thru 855.25 MHz
VHF: IR A - J / S1 - S41 CH (Hiperband)
E2 - E12 / F2 - F10
UHF: I21 - I69 CH / E21 - E69

•White Level
Apply the rated voltage at the rated frequency to the TV set, while it is receiving full white pattern RF signal of 60 dB/μV from its RF input via the pattern generator.
Turn all picture controls to maximum value. Measure the colour temperatures at the center of the screen by using the colour analyzer.

X=0.290 ± 0.015 Y=0.300 ± 0.015

Specifications are subject to change without prior notice.

MODEL DESTINATION (Operation Manual Languages)

28LW-92E: Deutsch, Français, Nederlands.
28LW-92EES: Español, Português.

WARNING

The chassis in this receiver is partially hot. Use an isolation transformer between the line cord plug and power receptacle, when servicing this chassis.
To prevent electric shock, do not remove cover. No user-serviceable parts inside. Refer servicing to qualified service personnel.

IMPORTANT SERVICING NOTES

Only qualified service personnel are allowed to carry out maintenance and repair of this receiver.

Servicing of High Voltage System and CRT

It is important that the static charge is removed from the high voltage system when carrying out work on the receiver. This can be achieved by connecting a 10K resistor (with a suitably insulated lead) from the CRT cavity connector to the CRT ground tag. This must be carried out with the AC supply disconnected from the receiver.

Note the following:

- The CRT in this receiver employs Integral Implosion Protection.
- If the CRT has to be changed it MUST be replaced with the correct type for continued safe working.
- DO NOT lift the CRT by its neck.
- When handing the CRT, ensure that shatterproof goggles are worn.
- Ensure that the CRT is discharge before handling.

X-Ray

This receiver is designed to keep any x-ray emission to an absolute minimum. Some fault conditions and servicing procedures may produce potentially hazardous x-ray radiation levels. This is a problem when in close proximity to the receiver for long periods of time. To reduce any risks associated with this, please observe the following precautions:

1. When undertaking any servicing on this chassis, DO NOT increase the EHT to more than 31 KV, (at a instantaneous beam current of 1000 μA).

2. Ensure that during normal operation the EHT does not exceed 28 KV (at a beam current of 1200 μA). This level has been preset in the factory. Always check that this level has not been exceeded after carrying out any repair on the receiver.
3. DO NOT replace the CRT with any other type than that specified in the parts listing as this may cause excessive x-ray radiation.

Before returning the receiver to the customer

In addition to the above checks, the following should also be carried out before returning the receiver to the customer.

1. Inspect all the leads to ensure that they are dressed correctly and that they are not obstructed or pinched by any other parts.

2. Ensure that all protective devices are in good condition. These will include nonmetallic control knobs, insulating fish papers, cabinets backs, compartment covers or shields, mechanical insulators, etc.

CONTROLS & TERMINALS

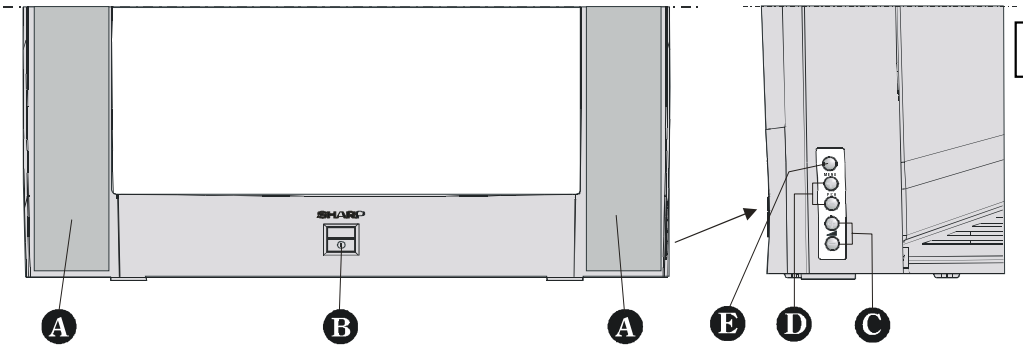

FRONT PANEL

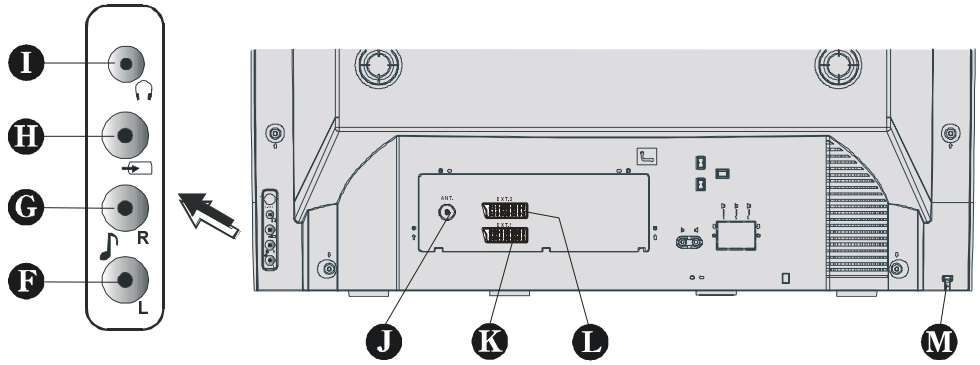

REAR PANEL

- **A** Speakers (left + right)
- **B** ⏻ = Power On / Off
- **C** **-** ◢ **+** = Volume -/+
- **D** **- P/CH +** = Program -/+
- **E** **MENU** = Menu
- **F** **AUDIO L** (♪) = Audio left
- **G** **AUDIO R** (♪) = Audio right
- **H** **VIDEO** (⇥)= VCR
- **I** 🎧 = Headphone 3,6 mm Ø
- **J** **ANT** = Antenna (75 Ω)
- **K** **EXT.1** = Scart Socket 1 (with RGB)
- **L** **EXT.2** = Scart Socket 2 (with SVHS)
- **M** Power Cable

REMOTE CONTROL

1. ⏻ = Stand By
2. △ = Cursor Up
3. ▷ = Cursor Right
4. OK = OK
5. (i) = Info (Program Menu)
6. **0 - 9** = Direct Program
7. **-/--** = Double Digit
8. = Wide mode button
9. **P/CH+** = Program +
10. ◢ **+** = Volume +
11. (TV) = TV / Quit Menu
12. (EXT) = EXT button
    (**EXT-1, RGB, EXT-2, EXT-2S, F-AV**)
13. **Yellow** = Feature Menu
14. **Blue** = Installation Menu
15. = Hold
16. = Update
17. = Index Page
18. = Reveal
19. = Expand
20. = Mix
21. = Teletext
22. = Time
23. **Red** = Sound Menu
24. **Green** = Picture Menu
25. 🔇 = Mute
26. **I-II** = Mono/Stereo - Dual I-II
27. **-**◢ = - Volume
28. **- P/CH** = -Program
29. = Flash back button
30. **M** = Menu
31. ▽ = Cursor Down
32. ◁ = Cursor Left

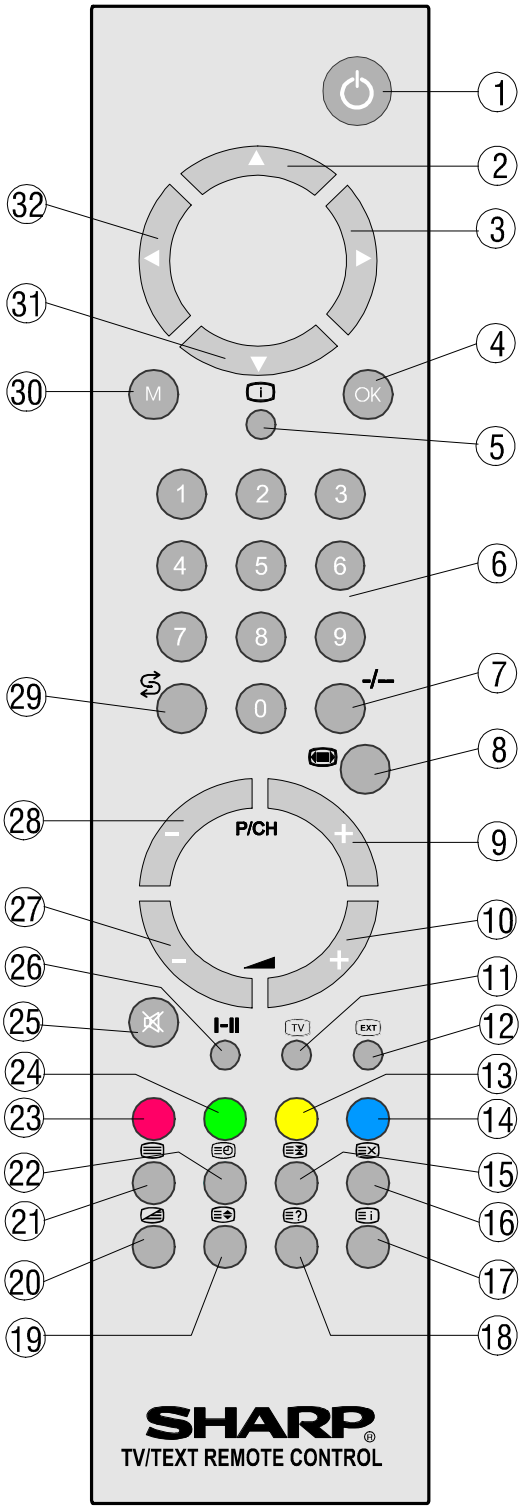

CHASSIS LAYOUT

Mother Unit

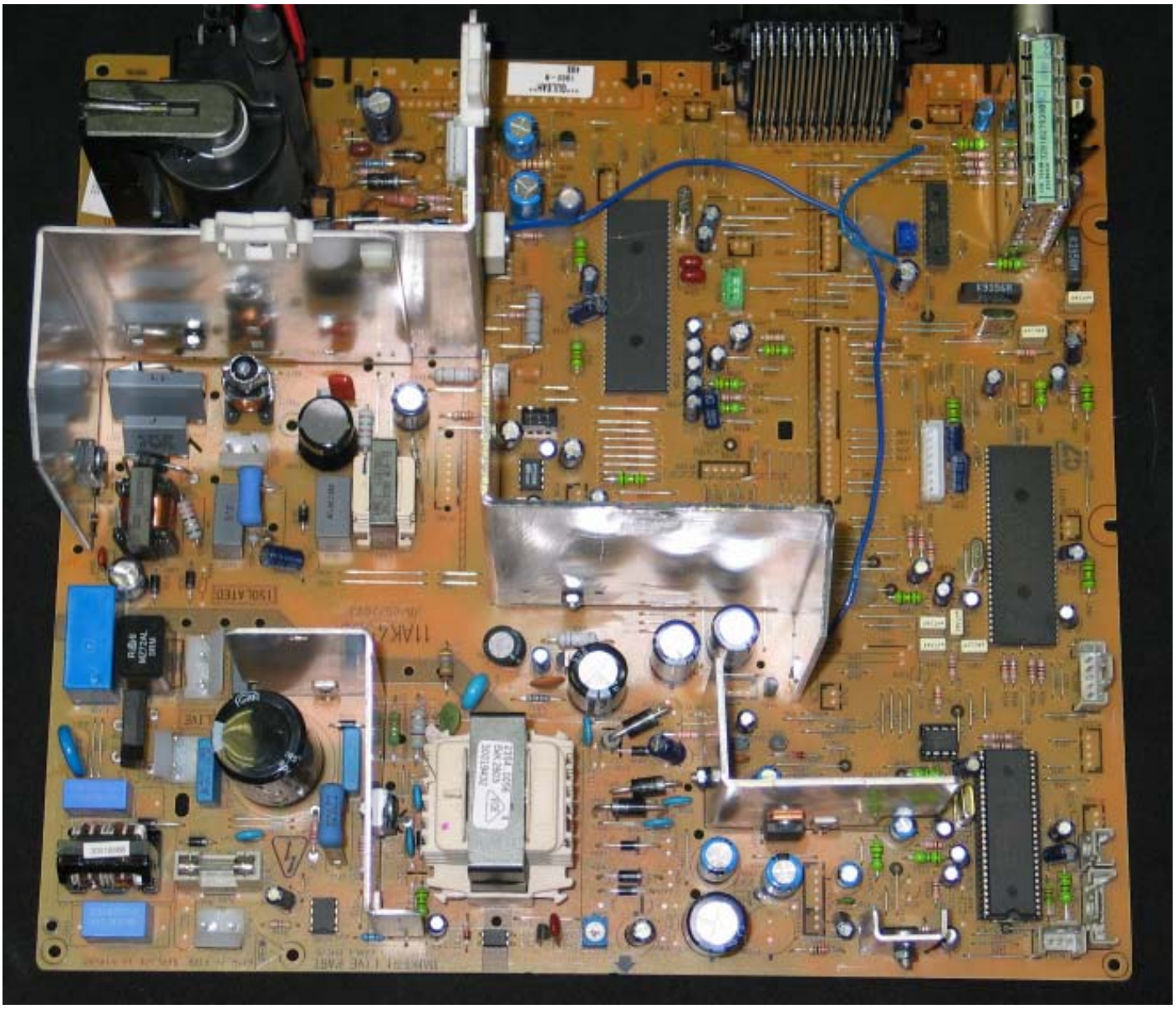

CRT Unit

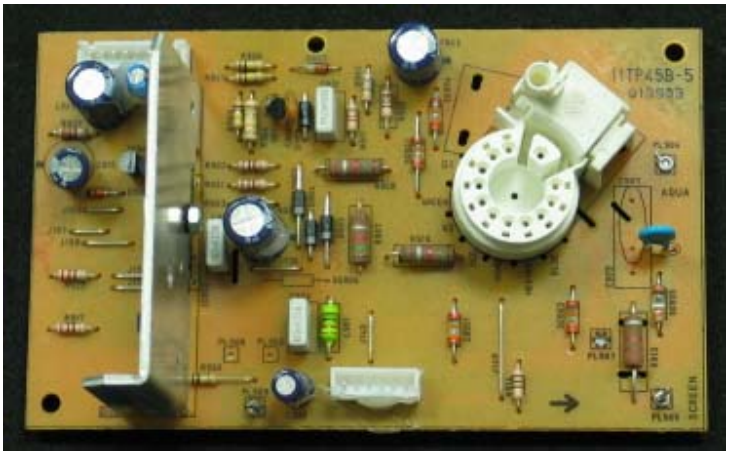

Control Panel Unit

Remote Control Unit

PARTS LISTING

REPLACEMENT PARTS

Replacement parts which have special safety characteristics are identified in this manual. Electrical components having such features are identified by △ in the Replacement Parts Listing.
The use of a substitute replacement part which does not have the same safety characteristics as the factory recommended is not permitted.
Replacement parts not shown in this service manual may create shock fire, or other hazards.

HOW TO ORDER REPLACEMENT PARTS

To have your order completed promptly and correctly please supply the following information.

1. MODEL NUMBER 2. REF. NO.
3. PART NO. (*) 4. DESCRIPTION
5. CODE 6. QUANTITY

(*) When ordering any part, a "V" should be added before the Part No.

	REF No.	(*) PARTS	DESCRIPTION	SN CODE	EX CODE
			PICTURE TUBE		
△	.	30008915	28" CRT TUBE SAFE 16:9 SF IRON	DA	CF
△	.	30014379	28DEG COIL&EARTH CB.SAFE 16:9WO/UL FTZ 2	AZ	AP
			TUNER		
	TU200	30009637	TUNER WSP (PLL) 38.9 MK2 - BATCH	BC	AR
			INTEGRATED CIRCUITS		
△	IC100	30015087	IC SAFE OPTOCOUPLER TCET1102G	AE	AA
	IC101	30001622	IC 7805 (1A)	AF	AB
	IC101	30018063	IC HT48RA0A OTP	AR	AF
	IC102	30001668	IC LM317T	AH	AC
	IC104	30001500	IC LM7808	AH	AC
	IC106	30011968	IC SMPS MC44608 DIP8	AQ	AF
	IC116	30001506	IC TL431	AH	AC
	IC200	30019492	IC VDP3134Y	BA	AP
	IC201	30001619	IC VIDEO SWITCH TEA6415C DIP20	AY	AM
	IC206	30021083	IC TDA9886T/V3-S024	AL	AX
	IC301	30016113	IC AAMP TDA7269A 2*14W MULTIWATT11	AV	AH
	IC600	30007793	IC STV9379FA	AW	AK
	IC601	30001506	IC TL432	AH	AC
	IC700	30013658	IC MSP3410G SDIP64	BD	AS
	IC704	30001518	IC TDA1308	AP	AE
	IC900	30018768	IC TDA6109	AW	AK
	IC901	30014346	IC 78L05 TO-92 (100mA)	AE	AA
	IC902	30014346	IC 78L05 TO-92 (100mA)	AE	AA
			TRANSISTORS		
	Q100	30001453	TR BC337	AC	AA
	Q103	30001454	TR BC548B	AC	AA
	Q106	30001454	TR BC548B	AC	AA
	Q107	30001428	TR BF423	AC	AA
	Q110	30001384	TR MCR22-6	AG	AB
	Q600	30001429	TR BUK444-200A	AM	AD
	Q601	30001435	TR NBJT BC639 1A/100V TO92	AB	AA
	Q602	30001441	TR BU2508AF	AP	AE
	Q900	30001427	TR BF422	AE	AA
	Q906	30001452	TR BC327	AC	AA
			DIODES		
	D1	30001371	DIODE ZENER 5.1V ZPD	AB	AA
	D100	30001329	DIODE 1N4007 1A/1000V 30A	AB	AA
	D100	30002733	LED INFRARED IR333	AC	AA
	D100	30001279	LED RED/GREEN LTL293SJ	AH	AC
	D101	20108354	DIODE BRIDGE GBU4M 4A/1000V 150A(FORMLU)	AE	AB
	D103	30001318	DIODE BA159 1A/800V 20A	AB	AA
	D104	30001318	DIODE BA159 1A/800V 20A	AB	AA
	D105	30001318	DIODE BA159 1A/800V 20A	AB	AA
	D106	30001344	DIODE ZENER 6.2V 1/2W	AB	AA

	REF No.	PARTS	DESCRIPTION	SN CODE	EX CODE
	D108	30001315	DIODE BYD33D 1A/200V 20A	AE	AA
	D110	30001288	DIODE BYV27-200 2A/200V 50A	AD	AA
	D111	30001318	DIODE BA159 1A/800V 20A	AB	AA
	D118	30009366	DIODE UF5402 3A/200V 150A	AF	AB
	D119	30009366	DIODE UF5402 3A/200V 150A	AF	AB
	D121	20092405	CN.ASY.37-DIODE UF5407+FERRITE BAR 5*8	AE	AB
	D127	30001315	DIODE BYD33D 1A/200V 20A	AE	AA
	D130	30001329	DIODE 1N4007 1A/1000V 30A	AB	AA
	D131	30001318	DIODE BA159 1A/800V 20A	AB	AA
	D133	30003722	DIODE ZENER ZPD15V	AA	AA
	D2	30001371	DIODE ZENER 5.1V ZPD	AB	AA
	D3	30001371	DIODE ZENER 5.1V ZPD	AB	AA
	D4	30001371	DIODE ZENER 5.1V ZPD	AB	AA
	D5	30001371	DIODE ZENER 5.1V ZPD	AB	AA
	D601	30001377	DIODE ZENER 33V UZT 33B	AF	AB
	D602	30001318	DIODE BA159 1A/800V 20A	AB	AA
	D603	30001299	DIODE UF5404 3A/400V 150A	AD	AA
	D604	30001299	DIODE UF5404 3A/400V 150A	AD	AA
	D609	30001318	DIODE BA159 1A/800V 20A	AB	AA
	D610	30001318	DIODE BA159 1A/800V 20A	AB	AA
	D611	30007681	DIODE UF5407 3A/800V 150A	AF	AB
	D613	30001291	DIODE HER107 1A/800V 30A	AB	AA
	D615	30001318	DIODE BA159 1A/800V 20A	AB	AA
	D625	30001320	DIODE GUC BY228	AF	AB
	D627	30001284	DIODE 1N4148 0.15A/100V 0.5A	AB	AA
	D902	30001318	DIODE BA159 1A/800V 20A	AB	AA
	D903	30001284	DIODE 1N4148 0.15A/100V 0.5A	AB	AA
	D904	30001318	DIODE BA159 1A/800V 20A	AB	AA
	D905	30001318	DIODE BA159 1A/800V 20A	AB	AA
	D907	30001318	DIODE BA159 1A/800V 20A	AB	AA
	D908	30014353	DIODE BAT85	AC	AA
			PACKAGED CIRCUITS		
	X100	30002852	XTAL REZ 455KHZ	AD	AA
	X200	30002851	XTAL 4MHZ L.C=30PF	AH	AC
	X201	30008778	XTAL 20.25MHZ	AF	AB
	X500	30006662	XTAL 6MHZ	AH	AC
	X700	30001756	XTAL 18.432MHZ	AP	AE
			COILS		
△	L101	30018866	LINE FILTER SAFE 2X22MH 10mmX12.5mm	AH	AC
	L102	30001971	FERRITE BEAT (805) BLM21A601S	AD	AA
	L103	30001992	FIXED COIL 10UH Q65 K-A	AB	AA
	L107	30007308	CAP CER 220PF 1KV K (PULSE)	AD	AA
	L203	30001996	FIXED COIL 22UH Q40 K	AB	AA
	L206	30001979	FIXED COIL 1UH Q45 M-A	AB	AA
	L207	30001979	FIXED COIL 1UH Q45 M-A	AB	AA
	L212	30001971	FERRITE BEAT (805) BLM21A601S	AD	AA
	L213	30001971	FERRITE BEAT (805) BLM21A601S	AD	AA
	L214	30001971	FERRITE BEAT (805) BLM21A601S	AD	AA
	L215	30001971	FERRITE BEAT (805) BLM21A601S	AD	AA
	L216	30001971	FERRITE BEAT (805) BLM21A601S	AD	AA
	L217	30001971	FERRITE BEAT (805) BLM21A601S	AD	AA
	L218	30001971	FERRITE BEAT (805) BLM21A601S	AD	AA
	L220	30001971	FERRITE BEAT (805) BLM21A601S	AD	AA
	L227	30001971	FERRITE BEAT (805) BLM21A601S	AD	AA
	L232	30001971	FERRITE BEAT (805) BLM21A601S	AD	AA
	L236	30001971	FERRITE BEAT (805) BLM21A601S	AD	AA
	L239	30001971	FERRITE BEAT (805) BLM21A601S	AD	AA
	L247	30001971	FERRITE BEAT (805) BLM21A601S	AD	AA
	L251	30001971	FERRITE BEAT (805) BLM21A601S	AD	AA
	L252	30001971	FERRITE BEAT (805) BLM21A601S	AD	AA
	L263	30001979	FIXED COIL 1UH Q45 M-A	AB	AA
	L264	30001979	FIXED COIL 1UH Q45 M-A	AB	AA
	L265	30001979	FIXED COIL 1UH Q45 M-A	AB	AA
	L266	30001987	FIXED COIL 4.7UH Q70 K-A	AB	AA

	REF No.	PARTS	DESCRIPTION	SN CODE	EX CODE
	L500	30001992	FIXED COIL 10UH Q65 K-A	AB	AA
	L501	30001992	FIXED COIL 10UH Q65 K-A	AB	AA
	L502	30001992	FIXED COIL 10UH Q65 K-A	AB	AA
	L503	30001992	FIXED COIL 10UH Q65 K-A	AB	AA
	L504	30001992	FIXED COIL 10UH Q65 K-A	AB	AA
	L505	30001992	FIXED COIL 10UH Q65 K-A	AB	AA
	L506	30006770	FIXED COIL 0.22UH	AB	AA
	L601	30002031	FIXED COIL INJECTION 15MH	AL	AD
	L602	30002156	LINEARITY COIL 30UH 110' (AK19)	AL	AD
	L603	30002829	FIXED COIL BRIDGE 1.5MH	AL	AD
	L700	30001996	FIXED COIL 22UH Q40 K	AB	AA
	L701	30001996	FIXED COIL 22UH Q40 K	AB	AA
	L702	30001996	FIXED COIL 22UH Q40 K	AB	AA
	L703	30001996	FIXED COIL 22UH Q40 K	AB	AA
	L711	30001996	FIXED COIL 22UH Q40 K	AB	AA
	L714	30001971	FERRITE BEAT (805) BLM21A601S	AD	AA
	L715	30001971	FERRITE BEAT (805) BLM21A601S	AD	AA
	L717	30001979	FIXED COIL 1UH Q45 M-A	AB	AA
	L719	30001968	FERRITE BEAD (0805) BLM21B201S	AE	AA
			CERAMIC FILTERS		
	Z200	30014261	FILTER SAW K3958M	AR	AF
	Z201	30012545	FILTER SAW K9656M	AG	AR
			TRANSFORMERS		
⚠	TR100	30019432	TRF SMPS SAFE AK45 110° (170-270V)	AS	AG
⚠	TR600	30021290	TRF FBT SAFE 110° 50HZ LAYER	BC	AS
	TR601	30002090	LINE DRIVER NEW TYPE	AM	AD
			CAPACITORS		
	C100	30000352	CAP EL 100UF 16V M	AB	AA
	C101	30000190	CAP CER 100PF 50V J CH	AB	AA
⚠	C102	30000084	CAP MKT SAFE 150NF 275V M AC P=15	AG	AC
	C103	30000190	CAP CER 100PF 50V J CH	AB	AA
⚠	C103	30000094	CAP MKT SAFE 220NF 275V M AC	AB	AA
	C104	30000190	CAP CER 100PF 50V J CH	AB	AA
	C105	30000290	CAP CER 10NF 50V Z F	AB	AA
	C106	30000290	CAP CER 10NF 50V Z F	AB	AA
	C106	30000371	CAP EL 22UF 50V M	AB	AA
	C107	30000433	CAP CER 1NF 1KV M B	AB	AA
⚠	C107	30000420	CAP EL 150UF 400V M	AQ	AF
	C108	30000433	CAP CER 1NF 1KV M B	AB	AA
	C108	30000161	CAP MKP SAFE 47NF 630V J	AE	AB
	C109	30000225	CAP CER 220PF 50V J SL	AB	AA
	C110	30000225	CAP CER 220PF 50V J SL	AB	AA
	C111	30007308	CAP CER 220PF 1KV K (PULSE)	AD	AA
	C113	30006940	CAP CER 2.7NF 1KV K B	AB	AA
	C114	30007308	CAP CER 220PF 1KV K (PULSE)	AD	AA
⚠	C115	30000440	CAP CER SAFE 2.2NF 4KV M	AC	AA
	C118	30007308	CAP CER 220PF 1KV K (PULSE)	AD	AA
	C119	30000090	CAP MKT 22NF 100V J	AB	AA
	C120	30007308	CAP CER 220PF 1KV K (PULSE)	AD	AA
	C122	30007308	CAP CER 220PF 1KV K (PULSE)	AD	AA
	C124	30000376	CAP EL 220UF 25V M	AB	AA
	C130	30000436	CAP CER 10NF 1KV ZE	AC	AA
	C133	30018259	CAP EL 4700UF 25V M	AG	AC
	C134	30018259	CAP EL 4700UF 25V M	AG	AC
	C135	30018259	CAP EL 4700UF 25V M	AG	AC
	C137	30000367	CAP EL 1UF 250V M	AB	AA
	C140	30000393	CAP EL 3.3UF 50V M	AB	AA
	C141	30000359	CAP EL 1000UF 16V M	AC	AA
	C142	30000387	CAP EL 33UF 50V M	AB	AA
	C145	30000375	CAP EL 220UF 16V M	AB	AA
	C148	30000360	CAP EL 1000UF 25V M	AE	AA
	C152	30000375	CAP EL 220UF 16V M	AB	AA
	C154	30000375	CAP EL 220UF 16V M	AB	AA

	REF No.	PARTS	DESCRIPTION	SN CODE	EX CODE
	C155	30000375	CAP EL 220UF 16V M	AB	AA
⚠	C160	30000076	CAP MKT SAFE 100NF 275V M AC	AE	AB
⚠	C161	30000440	CAP CER SAFE 2.2NF 4KV M	AC	AA
	C162	30007708	CAP CER 1NF 1KV K (PULSE)	AD	AA
	C164	30000362	CAP EL 1UF 50V M	AB	AA
	C165	30000362	CAP EL 1UF 50V M	AB	AA
	C166	30000225	CAP CER 220PF 50V J SL	AB	AA
	C168	30000161	CAP MKP SAFE 47NF 630V J	AE	AB
	C172	30000313	CAP CER 22NF 50V Z F	AB	AA
	C212	30000352	CAP EL 100UF 16V M	AB	AA
	C225	30000109	CAP MKT 470NF 63V J	AD	AA
	C226	30000352	CAP EL 100UF 16V M	AB	AA
	C229	30000345	CAP EL 10UF 50V M	AB	AA
	C252	30000387	CAP EL 33UF 50V M	AB	AA
	C253	30000345	CAP EL 10UF 50V M	AB	AA
	C259	30000345	CAP EL 10UF 50V M	AB	AA
	C265	30000109	CAP MKT 470NF 63V J	AD	AA
	C266	30000109	CAP MKT 470NF 63V J	AD	AA
	C277	30000345	CAP EL 10UF 50V M	AB	AA
	C280	30000345	CAP EL 10UF 50V M	AB	AA
	C283	30000345	CAP EL 10UF 50V M	AB	AA
	C286	30000345	CAP EL 10UF 50V M	AB	AA
	C327	30000109	CAP MKT 470NF 63V J	AD	AA
	C348	30000109	CAP MKT 470NF 63V J	AD	AA
	C351	30000345	CAP EL 10UF 50V M	AB	AA
	C356	30000109	CAP MKT 470NF 63V J	AD	AA
	C357	30000345	CAP EL 10UF 50V M	AB	AA
	C358	30000345	CAP EL 10UF 50V M	AB	AA
	C506	30000345	CAP EL 10UF 50V M	AB	AA
	C507	30000393	CAP EL 3.3UF 50V M	AB	AA
	C508	30000345	CAP EL 10UF 50V M	AB	AA
	C522	30000345	CAP EL 10UF 50V M	AB	AA
	C523	30000345	CAP EL 10UF 50V M	AB	AA
	C524	30000345	CAP EL 10UF 50V M	AB	AA
	C525	30000345	CAP EL 10UF 50V M	AB	AA
	C530	30000375	CAP EL 220UF 16V M	AB	AA
	C601	30000351	CAP EL 10UF 350V M	AE	AA
	C603	30000402	CAP EL 47UF 100V M	AB	AA
	C604	30000075	CAP MKT 100NF 250V K (DC)	AD	AA
	C605	30000406	CAP EL 47UF 250V M (HR) 105°	AL	AD
	C608	30000409	CAP EL 470UF 25V M	AD	AA
	C609	30000082	CAP MKT 15NF 63V J	AB	AA
	C612	30000348	CAP EL 10UF 160V M	AB	AA
	C613	30000360	CAP EL 1000UF 25V M	AE	AA
	C614	30000360	CAP EL 1000UF 25V M	AE	AA
	C616	30023450	CAP MKP 5.1NF 2KV J	AD	AA
	C617	30000123	CAP PP 33NF 630V K	AG	AC
	C618	30000444	CAP CER 470PF 1KV KB	AB	AA
	C619	30000367	CAP EL 1UF 250V M	AB	AA
	C620	30000156	CAP MKP SAFE 430NF 250V J	AF	AB
	C621	30000136	CAP MKP SAFE 12NF 2000V %3.5	AG	AC
	C622	30000137	CAP MKP 15NF 630V J	AG	AC
	C623	30000172	CAP MKP SAFE 680NF 250V J (P=15)	AH	AC
	C624	30000177	CAP MKP SAFE 820NF 250V J	AK	AC
	C631	30000296	CAP CER 100NF 100V Z F	AB	AA
	C632	30000074	CAP MKT 100NF 63V J	AC	AA
	C636	30009208	CAP CER 470PF 1KV K (PULSE)	AC	AA
	C638	30000092	CAP MKT 220NF 63V J	AD	AA
	C643	30000092	CAP MKT 220NF 63V J	AD	AA
	C646	30000296	CAP CER 100NF 100V Z F	AB	AA
	C648	30000069	CAP MKT 1NF 100V J	AC	AA
	C700	30000352	CAP EL 100UF 16V M	AB	AA
	C701	30000345	CAP EL 10UF 50V M	AB	AA
	C708	30000407	CAP EL 470UF 16V M	AC	AA
	C717	30000092	CAP MKT 220NF 63V J	AD	AA
	C718	30000092	CAP MKT 220NF 63V J	AD	AA

	REF No.	PARTS	DESCRIPTION	SN CODE	EX CODE
	C720	30000345	CAP EL 10UF 50V M	AB	AA
	C724	30000345	CAP EL 10UF 50V M	AB	AA
	C735	30000393	CAP EL 3.3UF 50V M	AB	AA
	C736	30000345	CAP EL 10UF 50V M	AB	AA
	C737	30000345	CAP EL 10UF 50V M	AB	AA
	C739	30000345	CAP EL 10UF 50V M	AB	AA
	C744	30000345	CAP EL 10UF 50V M	AB	AA
	C754	30000352	CAP EL 100UF 16V M	AB	AA
	C769	30000345	CAP EL 10UF 50V M	AB	AA
	C771	30000345	CAP EL 10UF 50V M	AB	AA
	C772	30000345	CAP EL 10UF 50V M	AB	AA
	C776	30000352	CAP EL 100UF 16V M	AB	AA
	C782	30000352	CAP EL 100UF 16V M	AB	AA
	C784	30000362	CAP EL 1UF 50V M	AB	AA
	C789	30000362	CAP EL 1UF 50V M	AB	AA
	C791	30000362	CAP EL 1UF 50V M	AB	AA
	C808	30000345	CAP EL 10UF 50V M	AB	AA
	C809	30000409	CAP EL 470UF 25V M	AD	AA
	C900	30000075	CAP MKT 100NF 250V K (DC)	AD	AA
	C902	30000415	CAP EL 4.7UF 250V M	AC	AA
	C904	30000287	CAP CER 10NF 50V K B	AA	AA
	C905	30000350	CAP EL 10UF 250V M	AD	AA
	C906	30000075	CAP MKT 100NF 250V K (DC)	AD	AA
	C908	30000438	CAP CER 2.2NF 2KV	AD	AA
	C909	30000359	CAP EL 1000UF 16V M	AC	AA
	C915	30000407	CAP EL 470UF 16V M	AC	AA
	C916	30000352	CAP EL 100UF 16V M	AB	AA
	C931	30000075	CAP MKT 100NF 250V K (DC)	AD	AA
	C932	30000367	CAP EL 1UF 250V M	AB	AA
	CXXX	30000266	CAP CER 560PF 50V J SL	AB	AA
	CXXX	30000371	CAP EL 22UF 50V M	AB	AA
			RESISTORS		
	R100	30000718	RES CF 1/4W 4.7K J	AB	AA
	R101	30000896	RES MF 1/4W 160K G	AA	AA
	R102	30000801	RES CF 1/4W 7.5K J	AA	AA
	R103	30000712	RES CF 1/4W 470R J	AB	AA
	R104	30000801	RES CF 1/4W 7.5K J	AA	AA
	R105	30000982	RES MF 1/4W 4.7K J	AA	AA
	R106	30000712	RES CF 1/4W 470R J	AB	AA
	R108	30000452	RES CF 1/4W 10R J	AB	AA
	R112	30000551	RES CF 1/4W 18R J	AB	AA
	R113	30000551	RES CF 1/4W 18R J	AB	AA
	R114	30000471	RES CF 1/4W 10K J	AB	AA
	R115	30000471	RES CF 1/4W 10K J	AB	AA
	R116	30000689	RES CF 1/4W 3.9K J	AB	AA
	R116	30001173	RES MO 1W 0.47R J	AB	AA
⚠	R117	30001257	RES MG SAFE 1/2W 4.7M J	AD	AA
	R118	30000580	RES CF 1/4W 22R J	AB	AA
	R121	30000526	RES CF 1/4W 1.5K J	AB	AA
	R122	30000770	RES CF 1/4W 680R J	AB	AA
	R123	30000712	RES CF 1/4W 470R J	AB	AA
	R124	30000622	RES CF 1/4W 270R J	AB	AA
	R131	30000495	RES CF 1/4W 1.2K J	AB	AA
	R132	30000495	RES CF 1/4W 1.2K J	AB	AA
	R133	30000880	RES MF 1/4W 130K F	AA	AA
	R137	30000481	RES CF 1/4W 1M J	AB	AA
	R138	30000660	RES CF 1/4W 3.3K J	AB	AA
	R140	30015222	RES MO 1W 0.75R J	AA	AA
	R150	30000466	RES CF 1/4W 1K J	AB	AA
⚠	R152	30001224	RES FUSE SAFE 1/2W 0.22R J	AB	AA
	R165	30001159	RES MO 1W 0.33R J	AB	AA
	R167	30018085	CAP VAR SAFE 510V K MFCN14D511	AD	AA
	R168	30018085	CAP VAR SAFE 510V K MFCN14D512	AD	AA
	R206	30000459	RES CF 1/4W 100R J	AB	AA
	R207	30000459	RES CF 1/4W 100R J	AB	AA

	REF No.	PARTS	DESCRIPTION	SN CODE	EX CODE
	R219	30000792	RES CF 1/4W 75R J	AB	AA
	R221	30000792	RES CF 1/4W 75R J	AB	AA
	R231	30000792	RES CF 1/4W 75R J	AB	AA
	R235	30000655	RES CF 1/4W 330R J	AB	AA
	R247	30000500	RES CF 1/4W 12K J	AB	AA
	R265	30000459	RES CF 1/4W 100R J	AB	AA
	R266	30000459	RES CF 1/4W 100R J	AB	AA
	R288	30000770	RES CF 1/4W 680R J	AB	AA
	R317	30000792	RES CF 1/4W 75R J	AB	AA
	R326	30000815	RES CF 1/4W 8.2K J	AB	AA
	R336	30000466	RES CF 1/4W 1K J	AB	AA
	R337	30000466	RES CF 1/4W 1K J	AB	AA
	R338	30000466	RES CF 1/4W 1K J	AB	AA
	R505	30000471	RES CF 1/4W 10K J	AB	AA
	R506	30000471	RES CF 1/4W 10K J	AB	AA
	R519	30000466	RES CF 1/4W 1K J	AB	AA
	R537	30000466	RES CF 1/4W 1K J	AB	AA
	R567	30000459	RES CF 1/4W 100R J	AB	AA
	R568	30000459	RES CF 1/4W 100R J	AB	AA
	R601	30000470	RES CF 1/2W 10K J	AA	AA
⚠	R603	30001244	RES FUSE SAFE 1/2W 0.47R J	AB	AA
⚠	R604	30001244	RES FUSE SAFE 1/2W 0.47R J	AB	AA
	R605	30000927	RES MF 1/4W 220K J	AB	AA
	R608	30001100	RES MO 1W 150R J	AB	AA
⚠	R611	30001244	RES FUSE SAFE 1/2W 0.47R J	AB	AA
	R612	30000471	RES CF 1/4W 10K J	AB	AA
	R613	30001234	RES FUSE 2W 33R J	AC	AA
⚠	R614	30001244	RES FUSE SAFE 1/2W 0.47R J	AB	AA
	R616	30018904	RES MO 5W 4.7k J	AD	AA
	R618	30001215	RES FUSE SAFE 1W 1R J	AC	AA
	R630	30000872	RES MF 1/4W 120K F	AA	AA
	R631	30000872	RES MF 1/4W 120K F	AA	AA
	R639	30001162	RES MO 1W 390R J	AB	AA
	R640	30001134	RES MO 2W 2.2R J	AB	AA
	R641	30001004	RES MF 1/2W 0.56R J	AB	AA
	R644	30000649	RES CF 1/2W 33R J	AB	AA
	R645	30000580	RES CF 1/4W 22R J	AB	AA
⚠	R649	30001228	RES FUSE SAFE 1/2W 2.2R J	AB	AA
	R650	30001082	RES MO 1/2W 1K J	AB	AA
	R652	30000848	RES MF 1/4W 1K F	AB	AA
	R657	30000466	RES CF 1/4W 1K J	AB	AA
	R658	30000466	RES CF 1/4W 1K J	AB	AA
	R723	30000459	RES CF 1/4W 100R J	AB	AA
	R818	30000723	RES CF 1/4W 47K J	AB	AA
	R900	30000788	RES CF 1/4W 6.8M J	AB	AA
	R901	30000459	RES CF 1/4W 100R J	AB	AA
	R902	30000459	RES CF 1/4W 100R J	AB	AA
	R903	30000459	RES CF 1/4W 100R J	AB	AA
	R904	30000535	RES CF 1/2W 150K J	AB	AA
	R905	30000477	RES CF 1/4W 100K J	AB	AA
	R906	30000477	RES CF 1/4W 100K J	AB	AA
	R907	30023197	RES CC 1W 1.5K K	AD	AA
	R908	30023197	RES CC 1W 1.5K K	AD	AA
	R909	30000477	RES CF 1/4W 100K J	AB	AA
	R910	30023197	RES CC 1W 1.5K K	AD	AA
	R911	30000466	RES CF 1/4W 1K J	AB	AA
	R912	30000459	RES CF 1/4W 100R J	AB	AA
	R913	30021483	RES CC 1W 2.2K K	AD	AA
	R914	30000459	RES CF 1/4W 100R J	AB	AA
	R917	30000583	RES CF 1/4W 220R J	AB	AA
	R923	30000583	RES CF 1/4W 220R J	AB	AA
	R927	30000583	RES CF 1/4W 220R J	AB	AA
	R930	30000477	RES CF 1/4W 100K J	AB	AA
			MISCELLANEOUS PARTS		
	SW101	30002181	SWITCH TACT(4)	AC	AA

	REF No.	PARTS	DESCRIPTION	SN CODE	EX CODE
	SW102	30002181	SWITCH TACT(4)	AC	AA
	SW103	30002181	SWITCH TACT(4)	AC	AA
	SW104	30002181	SWITCH TACT(4)	AC	AA
	SW105	30002181	SWITCH TACT(4)	AC	AA
⚠	PL100	30001792	CONN HEADER 2P 7.5MM TOP WHT	AC	AA
⚠	PL101	30001795	CONN HEADER 3P 5/7.5MM TOP WHT	AC	AA
⚠	PL101	30002325	CNAS 2P/600 TB FLT W/C UL2468AWG24	AF	AB
	PL102	30001792	CONN HEADER 2P 7.5MM TOP WHT	AC	AA
	PL102	30002335	CNAS 3P/600 PREAMP FLT W/C UL2468AWG24	AG	AB
	PL106	30001830	CONN HEADER 2P 2.5MM TOP BLUE SD	AB	AA
	PL106	30002362	CNAS 830 FAV SHL W/4C+FER	AR	AF
	PL107	30001839	CONN HEADER 3P 2.5MM TOP GREEN SD	AC	AA
	PL108	30020926	CNAS 3P/900 FLT W/BLK C UL2468AWG24	AE	AA
	PL109	30002302	CNAS 6P/450 TB FLT W/C UL2468AWG24	AF	AB
	PL204	30010921	DOUBLE-DECK SCART SOCKET	AM	AD
	PL206	30010039	CONN HEADER 8P 2.5MM TOP WHT	AB	AA
	PL207	30001830	CONN HEADER 2P 2.5MM TOP BLUE SD	AB	AA
	PL500	30001783	CONN HEADER 5P 2.5MM TOP BD	AC	AA
	PL502	30001784	CONN HEADER 6P 2.5MM TOP BD	AC	AA
	PL503	30001762	CONN HEADER 2P 2.5MM(9.7MM) TOP	AC	AA
	PL504	30001770	CONN HEADER 3P 2.5MM TOP BD	AC	AA
⚠	PL602	30001792	CONN HEADER 2P 7.5MM TOP WHT	AC	AA
	PL602	30016483	CNAS 2P/600 HRZ DIS W/C UL1672AWG24	AE	AA
	PL603	30001829	CONN HEADER 2P 2.5MM TOP WHT SD	AB	AA
	PL603	30019083	CNAS 2P/600 SIS W/C+FER UL1007AWG24	AF	AB
⚠	PL604	30001850	CONN HEADER 6P 2.5MM TOP WHT SD	AC	AA
	PL703	30001839	CONN HEADER 3P 2.5MM TOP GREEN SD	AC	AA
	PL708	30001762	CONN HEADER 2P 2.5MM(9.7MM) TOP	AC	AA
	PL709	30001764	CONN HEADER 2P 2.5MM(9.7MM) TOP BLACK	AC	AA
	PL711	30001836	CONN HEADER 3P 2.5MM TOP BLACK SD	AB	AA
⚠	PL901	30001855	SOCKET CRT SAFE NARROWNECK W/GND	AM	AD
	PL902	30010039	CONN HEADER 8P 2.5MM TOP WHT	AB	AA
	PL902	30027546	CNAS 5P/350 SHL+3P/350 SIS RGB W/DC+FER	AM	AD
⚠	PL903	30001850	CONN HEADER 6P 2.5MM TOP WHT SD	AC	AA
⚠	PL903	30027043	CNAS 6P-4P+1P/600 SIS W/3C+FER UL1007	AH	AC
	JK101	30001893	RCA JACK 1P YELLOW 28 FAV	AG	AB
	JK102	30001891	RCA JACK 1P WHITE 28 FAV	AG	AB
	JK103	30001892	RCA JACK 1P RED 28 FAV	AG	AB
	JK108	30001902	JACK HEADPHONE STEREO WO/SW	AH	AC
	A-A	30009848	CABL 1P/240 SIS	AB	AA
	B-B	30009834	CABL 1P/60 SIS	AB	AA
	J344	30001996	FIXED COIL 22UH Q40 K	AB	AA
	MD101	30001669	PREAMPLIFIER TFMS1380	AM	AD
	S224	30000452	RES CF 1/4W 10R J	AB	AA
	SG901	30000428	SPARK GAP 300V	AG	AB
	SG902	30000428	SPARK GAP 300V	AG	AB
	SG903	30000428	SPARK GAP 300V	AG	AB
	SG904	30000428	SPARK GAP 300V	AG	AB
	SG905	30021532	SPARK GAP 1500V	AG	AC
⚠	TH101	30001268	THERMISTOR 3P	AM	AD
	.	30002238	CABL 2P/200 SPK DIS UL1672AWG24	AC	AA
	.	30002238	CABL 2P/200 SPK DIS UL1672AWG25	AC	AA
⚠	F100	30001731	FUSE SAFE 2.5A 250V 5*20MM	AC	AA
	.	35000136	FUSE HOLDER TK79-A (GRAY)	AD	AA
	.	30001964	FERRITE BAR 5*8	AD	AA
	.	30000426	CAP EL 6.8UF 50V M (BPL)	AE	AA
	.	30000426	CAP EL 6.8UF 50V M (BPL)	AE	AA
	.	30018087	CNAS 2P/350 TRFPFC DIS W/C	AE	AA
	.	30002368	CNAS 2P/650 AC MAINS W/C	AF	AB
	.	30007681	DIODE UF5407 3A/800V 150A	AF	AB
	.	30013903	CNAS 2P/900 DIS W/C+FER UL2547 AWG24	AG	AB
	.	30013905	CNAS 2P/900 DIS W/BLKC+FER UL2547 AWG24	AG	AB
	.	30000285	CAP CER 1NF 100V KB	AA	AA
	.	30006712	FERRITE BEAD 3.5X4.7X0.8	AB	AA
	.	30009833	CABL 1P/100 SIS	AB	AA
	.	30009833	CABL 1P/100 SIS	AB	AA

	REF No.	PARTS	DESCRIPTION	SN CODE	EX CODE
	.	30019101	CABL 1P/350 DIS UL1672AWG22	AB	AA
	.	30007728	CABLE 1P R2.6 50 W/CLIPS	AC	AA
	.	20137502	IC 24C16 V033L4214A00000100212	AG	AB
	.	30007758	DIODE BRIDGE GBU4M 4A/1000V 150A	AK	AC
⚠	.	30015614	TRF PFC SAFE 0,9A 42 MH EP	AX	AL
	.	30001947	TWEETER 8R 15W CLOSED	AP	AE
	.	30028092	SPEAKER 8R 15W 57*160 (improved)	AN	AE
		20140850	IC 24C16 V043L4314A00000100212	AB	AG
⚠		30028208	POWER CORD SAFE EURO 2.2M SHAR	AH	AT
	.	20143008	R/C 1548 NOBRAND (EKO2GRAY(I) (F) SHARP	AY	AM
⚠	.	30022450	SWITCH SAFE ON/OFF 8A/128A	AK	AC
	.	30001386	TR MTP6N60E (PLASTIC)	AP	AE
	.	20150375	PR.IC.45-SHARP 1.2.67-L1	BD	AS
	.	20149936	ON/OFF SW ASSY.FTZ AK45 SHARP	AH	AU
⚠	.	20090585	CHASSIS FRAME 288X (AK37)	AE	AP
			ARTWORK		
	.	20143026	R/C 1548 SHARP (EKO2GRAY/I) (GRAY/S)	AY	AM
	.	20143099	LBL.BCK.CVR.SHARP 28LW92E(ES)A	-	-
	.	20143102	LBL.CART.BOX SHARP 28LW92E(ES)	-	-
	.	40014959	LOGO BADGE SHARP (W/P-SILVER BRUSH/H.ST)	AE	AA
	.	50011720	LABEL HIGH END	AG	AB
	.	50027812	CARTON BOX 2880/81/82/83 CR&W/TV EMPTY	BA	AQ
	.	50047045	I/B SHARP 28LW92E P/AK45/1	AD	AM
	.	50044966	I/B SHARP 28LW92E(ES) P/AK45/1	AB	AG
	.	50043630	WARRANTY CARD SHARP (ESP)	AB	AF
	.	50043628	CARTON BOX SHARP EL.SHARP (2842W)	BB	AQ
	.	50046865	PAP.I/B QSG SHARP 28LW92H/32LW92H (ENG)	AB	AA
	.	50046867	PAP.I/B CONNEC.G.SHAR.28LW92H/32LW92H(E)	AC	AA
			COSMETICS		
	.	20094721	SNOW BOX TOP 284XW	AU	AH
	.	20094762	SNOW BOX BOTTOM 284XW	AU	AH
	.	20098056	SNOW BOX ASSY 284XW 16:9	AZ	AN
⚠	.	20112906	BACK CVR.2841/42/43/44W W/SB EKO2GRAY(I)	BF	AU
	.	20112904	FRONT 2842W W/H SILVER (P)	BE	AT
	.	20140816	BUT.A.2442-2842-2842W-3242W(SILV-O.BLUE)	AF	AB
	.	40012331	RUBBER PAD (RC 1542)	AL	AD

How to update the Technical Information appeared on this Service Manual

1. Web site: https://www.vestelservice.com
2. Select: Technical Support
3. Login: 101278
4. Password: SHPII278

By this access you can consult the latest schematic diagram or request the Parts Listing of a concrete Production Date / Serial Number.

By this way it can be also consulted the issued Technical Reports (Service Bulletins).

SHARP®

No part of this publication may be reproduced, stored in a retrieval system, or transmitted in any form or by any means, electronic, mechanical, photocopying, recording, or otherwise, without prior written permission of the publisher.

Technical information and Production:

Vestel Electronik AS

PRINTED BY: ON:

Technical information re-issued:

SHARP ELECTRONICA ESPAÑA S.A.
Service Manual Group
Engineering Dept.
Polígono Industrial Can Sant Joan
08190 Sant Cugat del Vallès
Barcelona
Spain

Think Ecology, please use

RECYCLED PAPER